Operation & Service Manual

MODEL 7325

SCD *response*™

compression system

KENDALL

Operation & Service Manual

MODEL 7325

Table of Contents

Operation & Service Manual

MODEL 7325

Table of Contents

(CONTINUED)

Indications

The SCD RESPONSE Compression System is designed to apply sequential compression to the lower limbs to help prevent deep vein thrombosis in patients at risk. The System consists of the Model 7325 Controller, the Tubing Set (provided with the Controller) and the use of single-patient use SCD Sleeves (purchased separately from this Controller). The Sleeves compress the limbs to enhance venous blood movement. After the compression, the Controller measures the time it takes for the legs to refill with blood and waits that period of time before the next compression is initiated.

If you need further information regarding the SCD RESPONSE Compression System or its clinical benefits, please contact your Kendall Sales Representative.

Contraindications

The SCD RESPONSE Compression System may not be recommended for patients with the following:

1. Any local leg condition in which sleeves would interfere such as:
   a. Dermatitis
   b. Vein ligation (immediate postoperative)
   c. Gangrene
   d. Recent skin graft
2. Severe arteriosclerosis or other ischemic vascular disease.
3. Massive edema of legs or pulmonary edema from congestive heart failure.
4. Extreme deformity of leg.
5. Suspected existing deep venous thrombosis.

Cautions

1. When this device is used in the Operating Room, keep Comfort Cooling OFF to maintain air quiescence.
2. Federal (U.S.A.) law restricts this device to sale by or on the order of a physician.
3. Explosion Hazard. Do not use in the presence of flammable anesthetics.

WARNING: Do not attempt to repair or replace broken tubing connectors as hazardous inflation of the sleeves may occur.

This product is a component of Kendall's SCD System that is covered by various U.S. Patents. The use of non-Kendall components in place of and/or in combination with this Kendall component may constitute infringement of Kendall U.S. Patent(s). Kendall expressly states that no implied license with respect to use of non-Kendall components is granted by the sale or lease of this component.

Other Patents Applied For

General Operating Instructions

PRE-OPERATION CHECK

Before using the SCD RESPONSE Compression System on the patient, verify that:

- The Tubing Set is properly connected to the Controller and the Sleeves. Both Sleeves must be connected. If the System can only be used on one leg (e.g., amputee), connect the second sleeve but leave it packaged in its plastic bag.
- There are no kinks or sharp bends in the Tubing Set.
- The left and right sides of the Controller are unobstructed for free air flow.
- The Controller power cord is plugged into a grounded AC receptacle of the correct voltage.
- No flammable anesthetic gases are present.

USE OF BED HOOK

The SCD RESPONSE Compression System Controller features a bed hook. This feature may be used by placing the Controller on the footboard of the hospital bed with the Controller facing away from the patient (see Figure 1).

NOTE: *After placing the Controller on the footboard, confirm that the Controller is securely held by the footboard, and does not interfere with patient care.*

OPERATION

Turn the power switch on (located on the lower right side of the Controller). The Controller performs a self-diagnosis and LED check upon start-up. The various LEDs will illuminate in sequence, starting at the upper left area of the display panel and progressing to the lower right area. The Controller then begins normal operation with ankle inflation. See Figure 2 for the location of each control and indicator.

Normal operation begins with inflation of the ankle chamber of each of the Sleeves. The inflation of the ankle chamber is then sustained while the calf chamber is also inflated. Then the thigh chamber is inflated while the ankle and calf chamber inflations are maintained. After this inflation cycle is completed, causing a movement of blood out of the legs by the "milking" action of the Sleeves, all three chambers of the Sleeve are allowed to deflate while the legs refill with blood.

NOTE: *When the Controller is turned on, the Sleeve Cooling will be off. To activate Cooling, press the Comfort Cooling Button while the machine is operating. The Comfort Cooling LED will illuminate when the option is on.*

In the case of a fault condition, the alarm will sound. The appropriate fault code will be displayed and the System will shut down.

AUTOMATIC PRESSURE ADJUSTMENT

The SCD RESPONSE Compression System Controller features microprocessor controlled automatic pressure adjustment. This feature automatically sets the pressure to 45mmHg and maintains this set pressure even when the patient moves or changes position.

After the start-up sequence, the Controller will set itself and display 45 mmHg. During the first few inflation cycles the Controller will adjust itself to meet the 45mmHg. During the initial setting period the decimal points on each side of the 45 will appear (the display will be ".45.").

Within five cycles the Controller will stabilize between 43 and 47 mmHg and the decimal points will turn off, leaving "45" displayed.

NOTE: *After the initial 45mmHg pressure is reached, the Controller will continue to make small adjustments in order to maintain the 45 mmHg as part of normal operation.*

VASCULAR REFILL DETECTION

The SCD RESPONSE Compression System incorporates a "Vascular Refill Detection" method to customize the therapy for each patient's physiology. The System measures the time it takes for the veins in the legs to refill after having

General Operating Instructions (CONTINUED)

been compressed by the System. This time is then used in subsequent cycles as the time between compressions. The detection method is used when first powering up the System, after it reaches set pressure, and every thirty cycles thereafter. If the System pressure was not between 43 and 47mmHg, the refill time will be measured at the next cycle that is within these System pressure specifications. The method works best when the patient is still, however it will accommodate movement. The time will never be shorter than twenty seconds nor longer than sixty seconds between compressions. If Comfort Cooling has been selected, it will be disabled during the measurement of the refill time but will resume on the next cycle with no user intervention needed.

CYCLE MONITOR

The SCD RESPONSE Compression System Controller has a Cycle Monitor, which displays the status of the System's compression sequence. The Monitor consists of two backlit panels, which, when illuminated, read INFLATE and ASSESS. During operation, the INFLATE light will illuminate when the Controller is inflating the Sleeves to compress the legs. The ASSESS light will illuminate to indicate that the System is performing the Vascular Refill Detection assessment to determine the appropriate time between compression cycles. This assessment is done once the Controller is powered on and has reached set pressure and also every 30 cycles after that point. The ASSESS light will only illuminate during those measurements. During the time between cycles, if the assessment is not being made, these Monitor lights will not be illuminated.

COMFORT COOLING

The Comfort Cooling feature is provided to offer the most comfortable experience for the patient. When the Comfort Cooling button is pressed, the Comfort Cooling light will illuminate. This will indicate that in subsequent cycles, air will flow through the cooling chambers of the Sleeves onto the patient's legs while the chambers deflate between compressions. To deactivate the cooling option, press the Comfort Cooling button again. When Comfort Cooling is off, the Controller's compressor will be off between compression cycles.

POWER CORD STORAGE

Power cord storage for the SCD RESPONSE Compression System Controller is provided by wrapping the power cord around the bed hook. This is shown in Figure 3.

SLEEVE COMPATIBILITY

The SCD RESPONSE Compression System Controller is designed for use with SCD Sleeve Reorder #5330, 5329, 5480, 5345, 5336, 6330, 6329, 6480 and 6345. Sleeves can be connected to the controller via the Tubing Set provided with the controller. Additional or replacement Tubing Sets are available as Reorder #6328. Further instructions for Sleeve use is included with the packaging provided with the Sleeves.

Fault Conditions

Fault Messages (1)

CODE	FAULT TYPE	DESCRIPTION
SL	System Low	There is less than 8mmHg pressure at the end of the first inflation cycle or at the end of two consecutive cycles thereafter. POTENTIAL CAUSES • Tubing Set is not properly connected. • There is a leak or kinked tubing inside the Controller. • There is a significant leak in the Tubing Set or Sleeves. CORRECTIVE ACTIONS • Ensure proper Tubing Set connections. • Turn the Controller off and restart. If the System displays the same fault, ensure that internal Tubing connections are secure and Tubing is not kinked. If suspect, substitute a new Tubing Set or pair of Sleeves. • Turn the Controller off and restart. If the System displays the same fault, the unit requires servicing.
LO	Low	The System is unable to bring the pressure up above 43mmHg for five consecutive cycles. The pressure in the Sleeves is consistently below the set pressure. POTENTIAL CAUSES • Tubing Set is not properly connected. • Sleeves are too loose. • Internal Tubing not properly connected. • There is a leak in the Tubing Set or Sleeves. CORRECTIVE ACTIONS • Ensure proper Tubing Set connections. • Apply Sleeves so that only two fingers fit snugly between each Sleeve and the patient's leg. • Turn the Controller off and restart. If the System displays the same fault, ensure secure internal Tubing connections inside Controller. If suspect, substitute a new Tubing Set or pair of Sleeves. • Turn the Controller off and restart. If the Controller displays the same fault, the unit requires servicing.

(Continued on next page)

(1) When the microprocessor detects a fault condition, it interrupts the normal operation of the controller, deactivates all valves, displays a fault code, and sounds an audible alarm. This alarm will remain active until the Controller power switch is turned off.

Fault Conditions (CONTINUED)

CODE	FAULT TYPE	DESCRIPTION
SH	**System High**	Pressure has exceeded 90mmHg after 1.2 seconds of thigh portion of the inflation cycle: • On first cycle, Controller will switch to vent mode and adjust flow control appropriately. • On subsequent cycles, Controller will switch to the fault mode and display this code. POTENTIAL CAUSES • Tubing Set is kinked. • Sleeves are too tight. CORRECTIVE ACTIONS • Straighten out kinked Tubing Set. • Apply the Sleeves so that two fingers can fit snugly between each Sleeve and the patient's leg. • Turn the Controller off and restart. If the Controller displays the same fault, the unit requires servicing.
HI	**High**	The Controller is unable to bring the pressure down below 47mmHg for five consecutive cycles. The pressure in the Sleeves is consistently above the set pressure. POTENTIAL CAUSES • Sleeves are too tight. CORRECTIVE ACTIONS • Apply the Sleeves so that two fingers can fit snugly between each Sleeve and the patient's leg. • Turn the Controller off and restart. If the Controller displays the same fault, the unit requires servicing.
SP	**System Pressure**	The Controller has not controlled to 35 - 55mmHg for 12 consecutive cycles. POTENTIAL CAUSES • Sleeves are too tight. CORRECTIVE ACTIONS • Apply the Sleeves so that two fingers can fit snugly between each Sleeve and the patient's leg. • Turn the Controller off and restart. If the Controller displays the same fault, the unit requires servicing.
d1	**Internal Diagnostic One**	If a valve electrically malfunctions, the microprocessor will detect this condition, shut the System off, and display this code. The Controller should be returned to the manufacturer for repair.

Fault Conditions (CONTINUED)

CODE	FAULT TYPE	DESCRIPTION
d2	Internal Diagnostic Two	Upon start-up, the microprocessor performs diagnostic tests. If the Controller fails to pass all of these tests, it will not start and this fault code will be displayed. The Controller should be returned to the manufacturer for repair.
d3, d4	Internal Diagnostic Three, Four	These faults are indicated only during special test conditions and should not occur during normal operation. The Controller should be returned to the manufacturer for repair.
d5	Internal Diagnostic Five	This fault is indicated if the pump speed is not what is expected. Check to make sure the Sleeves are not too tight. If the fault reoccurs after re-starting the Controller, the Compressor Outlet Filter should be replaced or the Muffler should be cleaned. If fault reoccurs after replacement, the Controller should be returned to the manufacturer for repair.
d6	Internal Diagnostic Six	This fault is detected if the pressure exceeds 10 mmHg during the last 5 seconds of the vent cycle. Check to make sure there are no kinks in the internal tubing. The Controller should be returned to the manufacturer for repair.
d7 - d9	Internal Diagnostic Seven, Eight, Nine	These codes have not been implemented. They have been reserved for future use.

WATCHDOG CIRCUIT

If the Microprocessor cannot continue normal function, the watchdog circuit will trip. This causes the Controller to go into reset and restart normal operation.

If the cause of the disruption is still present, the unit will continue to attempt to reset, which will cause the alarm to sound once every second.

If the cause of the disruption was transient, such as a high energy RF pulse, the Controller will restart with the Comfort Cooling OFF.

Service and Maintenance

INTRODUCTION

The SCD RESPONSE Controller contains no user serviceable parts. User maintenance is covered in the MAINTENANCE and CLEANING sections that follow. All other maintenance is to be performed only by the user's appropriately qualified service technical personnel.

The service technician should be familiar with the operator's portion of this manual and the operating principles of the SCD RESPONSE Compression System. The fault codes displayed by the Controller are useful in diagnosing service problems. If a Controller is to be returned for service, a description of the operating conditions and the fault code displayed should accompany the unit.

This manual describes service procedures to the board level, with an exploded view of the Controller shown in Figure 5. If a component failure on a circuit board is suspected, the unit should be returned for service. It is recommended that the instrument be returned with the circuit board in place, as removal of the board(s) involves additional risk of mechanical damage and damage from electrostatic discharge (ESD).

WARRANTY AND FACTORY SERVICE

The Kendall Healthcare Products Company warrants that your SCD RESPONSE Compression System is free from defective material and workmanship. Our obligation under this warranty is limited to the repair of Controllers returned to the service address indicated at right, transportation charges prepaid, within one year of delivery to the original purchaser. Specifically, we agree to service and/or adjust any Controller as required if returned for that purpose, and to replace and repair any part which, upon our examination, is proven to have been defective. This warranty does not apply to the Tubing Set or the individual disposable leg Sleeves, or to equipment damaged through shipping , tampering, negligence, or misuse, including liquid immersion, autoclaving, or ETO sterilization.

This limited warranty does not cover, and is intended to exclude, any and all liability on the part of the Company, whether this limited warranty or any warranty implied by law, for any indirect or consequential damages for breach hereof or thereof. Except as expressly provided above in the limited warranty, the Company hereby negates and disclaims all express and implied warranties, including the warranties or merchantability and fitness for a particular purpose.

Some states do not allow the exclusion or limitation of incidental or consequential damages, so the foregoing limitation or exclusion regarding damages may not apply. Also, this Limited Warranty gives you specific legal rights, and you may also have other rights which may vary from state to state.

This service manual is intended for use as a guide to technically-qualified personnel when evaluating instrument malfunctions. It is not to be construed as authorization to perform warranty repairs. Unauthorized service will void the warranty.

Controllers requiring warranty repairs must be shipped, prepaid and insured, to the Service Center. The Kendall Healthcare Products Company maintains service facilities with the capability to promptly repair the SCD RESPONSE Compression System Controller. In the event of any service maintenance problem, contact the Service Manager. The toll-free number is (800) 765-4324. If the instrument is to be returned for service, please call the above number to obtain a return material authorization number and send it prepaid and insured, in the original carton, to:

Kendall Service Manager
ELECTRONIC ASSEMBLY CORPORATION
2121 Harrison Street
Neenah, WI 54956

MAINTENANCE

CAUTION:
Unplug the Controller before filter maintenance.

It is very important that the fan filter be cleaned frequently to ensure continued trouble-free operation. The Controller should never be run without the fan filter in place. To clean the fan filter, gently pry the fan cover off the left side of the

Service and Maintenance (CONTINUED)

Controller. Carefully remove the filter from the fan cover and brush loose dust and lint from the surface. Wash the filter in a mild detergent solution, dry thoroughly, and reinstall, making sure the filter material lies between the holding tabs of the fan filter cover. Do not just drop the filter in front of the fan.

VENTILATION

Obstruction of the left fan cover and right vents should be avoided. Free flow of air is necessary to prevent overheating and premature component failure.

FUSES

CAUTION: *Unplug the Controller before removing the fuse.*

Blown fuses should only be replaced with 3AG Slo Blo fuses, 0.75 ampere, 250 volt.

If a fuse blows a second time, it should be presumed that the Controller is defective and requires further service.

ELECTRICAL SAFETY

CAUTION: *Be sure the Controller is disconnected from the power source before removing the front cover. A potential SHOCK HAZARD exists when the front cover is removed even with the unit turned off.*

Periodic inspection should include a resistance check from the power plug grounding prong to the metal chassis inside the instrument. The chassis can be accessed by removing the fan cover. This resistance should not exceed 0.1 ohm. If ground resistance exceeds this value or the insulation integrity of the unit has been compromised through mechanical damage, the Controller should be returned to the Service Center for testing and repair.

The SCD RESPONSE Controller is designed to minimize the effects of uncontrolled electromagnetic interference and other types of interference. When using the Controller, avoid the use of equipment that causes erratic operation or degradation in performance.

CLEANING

The Controller cabinet can be cleaned as necessary with a soft cloth dampened with water. If necessary, a mild disinfectant and/or detergent can be used; excess fluid should be avoided. The Controller should be wiped with a clean, dry cloth afterward. Do not immerse in water. Do not use products containing ammonium chloride, or acetone, as those chemicals will degrade the integrity of the case.

The SCD RESPONSE Compression System cannot be effectively sterilized by liquid immersion, autoclaving, or ETO sterilization, as irreparable damage to the System will occur.

ELECTRICAL/ELECTRONICS DESCRIPTION

The electronics of the Controller are located on two PC boards (see Figures 6 and 7). There is no high voltage on the PC boards.

The first board can be found behind the membrane switch panel in the front cabinet. This is the CPU board which contains the LEDs and associated electronics which display information about the state of the System during normal operation, as well as in the fault mode or the various calibration and diagnostic modes. This board also contains the pressure transducers, the microprocessor, the alarm, and the valve control.

The second board is the Power board. It contains voltage regulation circuits, analog conditioning circuits, and motor control circuitry.

Operator input is provided through the membrane switch panel. Component or Controller failure will result in de-energizing the valves and the compressor. This will release pressure from the attached leg sleeves.

Service and Maintenance (CONTINUED)

PNEUMATIC DESCRIPTION

The rotary vane compressor, driven by a low-noise brushless DC motor, runs only when needed. Air can be directed from the compressor to the sleeve cooling chambers between compressions by pressing the Comfort Cooling button on the membrane switch panel. This causes the compressor to turn on and the cooling valve to be energized during this phase.

Air flow through the valve manifold assembly is controlled by the motor control circuitry working with the brushless DC motor. From the manifold assembly, the air is gated to the sleeve chambers during the 11-second compression phase by energizing solenoid valves A,C, and T in a particular sequence. At the end of this period, all three solenoid valves are de-energized simultaneously which disconnects the compressor from the Sleeves and allows the valves to release sleeve pressure to the atmosphere. The ankle pressure transducer monitors the pressure in the ankle portion of the circuit and provides data input to the microprocessor for use in determinating the proper motor control.

PORT IDENTITY

The Tubing Set connecting the Sleeves to the Controller is attached to the fitting on the rear of the Controller in the upper left hand corner (as viewed from behind the Controller). Inside this fitting are four ports which are, from left to right: ANKLE, COOLING, CALF, and THIGH (see Figure 4).

SYSTEM START-UP ROUTINE

- **PHASE I:**
  When the Controller is turned on, a series of tests is commenced lasting three seconds[2]:

  1. All LEDS illuminate and the alarm sounds for 0.5 seconds.
  2. The two seven-segment LEDS illuminate (displaying ".88.") and then they go off.
  3. The Comfort Cooling LED illuminates. The alarm sounds briefly and the Comfort Cooling LED goes off.
  4. The Cycle Monitor LEDs (INFLATE and ASSESS) illuminate then go off.

- **PHASE II:**
  The 45 mmHg set pressure is displayed. During this phase, the compressor flow is adjusted to a predetermined start value.

- **PHASE III:**
  The normal operating cycle begins with ankle inflation.

PRESSURE MONITORING

The LED display that is used to display the 45 mmHg set pressure and the fault codes can also be used to display the actual pressure and trigger a Vascular Refill Detection measurement. Press the hidden button (the right end of the dark blue horizontal line on the control panel — see Figure 2) and hold for two seconds. This will cause the display to change to Pressure Monitor Mode. The Controller will stay in this mode throughout the compression and deflation portions of the current cycle (or the next compression cycle if the button is pressed during the deflation portion of the cycle). During compression, the actual pressure sensed by the ankle pressure transducer will be displayed. The final ankle pressure will then be displayed for nine seconds while a Vascular Refill Detection measurement is initiated. The display will then read the number of seconds since the end of the compression until it finds the appropriate venous refill time of the patient. This new time is then displayed flashing while the sleeves are allowed to fully deflate. At this point, a new cycle will begin with the display reverting to the standard 45 mmHg pressure.

When the Controller is in the Pressure Monitor Mode, a decimal point will flash on either side of the 7-segment display.

(2) Detection of inoperative LEDs and the audible alarm function is the user's responsibility. The start-up routine also tests microprocessor function and system memory. If a fault condition is detected, either a fault code will be displayed or the unit will repeatedly go into reset which will result in a long beep every second

Calibration/Test Methods

See Disassembly/Reassembly procedure before testing.

INTRODUCTION

The SCD RESPONSE Compression System Controller has a special test modes for ankle and calf pressure transducer Calibration Verification and Calibration and a general function test that can verify microprocessor, solenoid valve and pneumatic functionality.

1. Factory calibration certification is void if the unit is opened.
2. **The unit should only be opened by persons trained in Electrostatic Discharge prevention methods and equipment.**
3. The ankle pressure transducer (labeled RED on the PCB and connected by red tubing) senses the pressure in the ankle chamber of the sleeve and is used to control System pressure (45 mmHg).
4. The calf pressure transducer (labeled BLUE on the PCB and connected by blue tubing) senses the pressure in the calf chamber of the sleeve and is used only during Vascular Refill Detection measurement.

ANKLE CALIBRATION VERIFICATION PROCEDURE

Equipment Required: A regulated air source with a constant output pressure set at 45.0 mmHg ± 0.2 mmHg.

NOTE: *The pressure transducers used in the SCD RESPONSE Compression System Controller are state-of-the-art, highly precise, and virtually drift-free devices.*

Complete the following steps to verify Ankle Calibration:

1. Unplug the Controller.
2. Turn the Controller on its face and remove the five screws located on the rear cabinet.
3. Carefully turn the Controller right side up so the front cabinet is facing you.
4. Gently lower the front cabinet toward you until the components inside are accessible. (Make sure the various electrical and pneumatic connections between the CPU Board and the rest of the unit are not dislodged.)
5. Carefully disconnect the RED Tubing that is attached to the Ankle Pressure Transducer on the Control Board (labeled RED).
6. Plug the Controller into a wall outlet.
   CAUTION: *ELECTRICAL SHOCK HAZARD.*
   Do not touch the electrical components on the chassis. The PC Boards are not at line voltage.
7. Place the Controller in the Ankle Calibration Verification Mode by pressing the Hidden and Comfort Cooling Buttons simultaneously while turning on the Controller. (The Hidden Button is located on the control panel at the very right end of the horizontal dark blue line.) This places the Controller in the Test Access Mode. The display will show "01." Press the Hidden Button until "04" appears in the display.
   NOTE: *Test Access Modes "01," "02," "05," "07," and "10" require dedicated manufacturing test equipment and are not intended for customer use. Do not use.*
8. Press the Comfort Cooling Button to initiate the Ankle Calibration Verification Mode. (The Controller will continuously display the pressure sensed at the ankle pressure transducer.)
9. Connect the calibrated air pressure source to the Ankle Pressure Transducer using a piece of tubing.
10. Apply 45.0 ± 0.2 mm Hg. Read the pressure on the display.
11. Disconnect Tubing. With no pressure applied read the display.
12. The display readings should be compared to the pressure applied to verify proper calibration.
13. To exit Ankle Calibration Verification Mode, turn off the Controller.
14. If the Controller requires calibration, proceed to step 7 in the Ankle Calibration Procedure.
15. Unplug the Controller.
16. Reconnect the RED tubing. Particular care should be taken to avoid stressing or kinking the tubing.
17. Carefully replace the front cabinet and turn the Controller on its face. Check for proper placement of feet, foam, and tubing.
18. Refasten the five screws. (Do not over-tighten.)

Calibration/Test Methods (CONTINUED)

ANKLE CALIBRATION PROCEDURE

Equipment Required: A regulated air source with a constant output pressure set at 45.0 mmHg ± 0.2 mmHg.

NOTE: *The pressure transducers used in the SCD RESPONSE Compression System Controller are state-of-the-art, highly precise, and virtually drift-free devices. It is not expected to require recalibration for several years or more of continuous use.*

Complete the following steps to Calibrate the Ankle Transducer:

1. Unplug the Controller.
2. Turn the Controller on its face and remove the five screws located on the rear cabinet.
3. Carefully turn the Controller right side up so the front cabinet is facing you.
4. Gently lower the front cabinet toward you until the components inside are accessible. (Make sure the various electrical and pneumatic connections between the CPU Board and the rest of the unit are not dislodged.)
5. Carefully disconnect the RED tubing that is attached to the Ankle Pressure Transducer on the Control Board (labeled RED).
6. Plug the Controller into a wall outlet.
   CAUTION: *ELECTRICAL SHOCK HAZARD.*
   Do not touch the electrical components on the chassis. The PC Boards are not at line voltage.
7. Place the Controller in the Ankle Calibration Mode by pressing the Hidden and Comfort Cooling Buttons simultaneously while turning on the Controller. (The Hidden Button is located on the control panel at the very right end of the horizontal dark blue line.) This places the Controller in the Test Access Mode. The display will show "01." Press the Hidden Button until "03" appears in the display.
   NOTE: *Test Access Modes "01," "02," "05," "07," and "10" require dedicated manufacturing test equipment and are not intended for customer use. Do not use.*
8. Press the Comfort Cooling Button to initiate the Ankle Calibration Mode. The Controller will now display the pressure in the line.
9. The INFLATE LED will be illuminated.
10. Connect the calibrated air pressure source to the Ankle Pressure Transducer using a piece of tubing.
11. With 45.0 ± 0.2 mm Hg applied, press the Comfort Cooling Button. (This will record the 45 mmHg set point in System software.)
12. The ASSESS LED will be illuminated.
13. Disconnect the tubing. With no pressure applied, press the Comfort Cooling Button. (This will record the 0 mmHg set point in System software.)
14. Turn the Controller off.
15. Reconnect the RED tubing. Particular care should be taken to avoid stressing or kinking the tubing.
16. Carefully replace the front cabinet and turn the Controller on its face. Check for proper placement of feet, foam, and tubing.
17. Refasten the five screws. (Do not over-tighten.)
    CAUTION: *If the Comfort Cooling Button is pressed inadvertently during the Calibration other than when specified in steps 8, 11, and 13, the Controller must be recalibrated.*

CALF CALIBRATION VERIFICATION PROCEDURE

Equipment Required: A regulated air source with a constant output pressure set at 18.0 mmHg ± 0.1 mmHg.

NOTE: *The pressure transducers used in the SCD RESPONSE Compression System Controller are state-of-the-art, highly precise, and virtually drift-free devices.*

Complete the following steps to verify Calf Calibration:

1. Unplug the Controller.
2. Turn the Controller on its face and remove the five screws located on the rear cabinet.
3. Carefully turn the Controller right side up so the front cabinet is facing you.
4. Gently lower the front cabinet toward you until the components inside are accessible. (Make sure the various electrical and pneumatic connections between the CPU Board and the rest of the unit are not dislodged.)
5. Carefully disconnect the BLUE tubing that is attached to the Calf Pressure Transducer on the Control Board (labeled BLUE).

(Continued on page 12)

Calibration/Test Methods (CONTINUED)

CALF CALIBRATION VERIFICATION PROCEDURE *(Continued)*

6. Plug the Controller into a wall outlet.
   CAUTION: *ELECTRICAL SHOCK HAZARD.*
   Do not touch the electrical components on the chassis. The PC Boards are not at line voltage.
7. Place the Controller in the Calibration Verification Mode by pressing the Hidden and Comfort Cooling Buttons simultaneously while turning on the Controller. (The Hidden Button is located on the control panel at the very right end of the horizontal dark blue line.) This places the Controller in the Test Access Mode. The display will show "01." Press the Hidden Button until "09" appears in the display.
   NOTE: *Test Access Modes "01," "02," "05," "07," and "10" require dedicated manufacturing test equipment and are not intended for customer use. Do not use.*
8. Press the Comfort Cooling Button to initiate the Calf Calibration Verification Mode. (The Controller will continuously display the pressure sensed at the Calf Pressure Transducer.)
9. Connect the calibrated air pressure source to the Calf Pressure Transducer using a piece of tubing.
10. Apply 18.0 ± 0.1 mmHg. Read the pressure on the display.
11. Disconnect the tubing. With no pressure applied read the display.
12. The display readings should be compared to the pressure applied to verify proper calibration.
13. To exit Calf Calibration Verification Mode, turn off the Controller.
14. If the Controller requires calibration, proceed to step 7 of the Calf Calibration Procedure.
15. Unplug the Controller.
16. Reconnect the BLUE tubing. Particular care should be taken to avoid stressing or kinking the tubing.
17. Carefully replace the front cabinet and turn the Controller on its face. Check for proper placement of feet, foam, and tubing.
18. Refasten the five screws. (Do not over-tighten.)

CALF CALIBRATION PROCEDURE

Equipment Required: A regulated air source with a constant output pressure set at 18.0 mmHg ± 0.1 mmHg.

NOTE: *The pressure transducers used in the SCD RESPONSE Compression System Controller are state-of-the-art, highly precise, and virtually drift-free devices. It is not expected to require recalibration for several years or more of continuous use.*

Complete the following steps to Calibrate the Calf Transducer:

1. Unplug the Controller.
2. Turn the Controller on its face and remove the five screws located on the rear cabinet.
3. Carefully turn the Controller right side up so the front cabinet is facing you.
4. Gently lower the front cabinet toward you until the components inside are accessible. (Make sure the various electrical and pneumatic connections between the CPU Board and the rest of the unit are not dislodged.)
5. Carefully disconnect the BLUE tubing that is attached to the Calf Pressure Transducer on the Control Board (labeled BLUE).
6. Plug the Controller into a wall outlet.
   CAUTION: *ELECTRICAL SHOCK HAZARD.*
   Do not touch the electrical components on the chassis. The PC Boards are not at line voltage.
7. Place the Controller in the Calf Calibration Mode by pressing the Hidden and Comfort Cooling Buttons simultaneously while turning on the Controller. (The Hidden Button is located on the control panel at the very right end of the horizontal dark blue line.) This places the Controller in the Test Access Mode. The display will show "01." Press the Hidden Button until "08" appears in the display.
   NOTE: *Test Access Modes "01," "02," "05," "07," and "10" require dedicated manufacturing test equipment and are not intended for customer use. Do not use.*
8. Press the Comfort Cooling Button to initiate the Calf Calibration Mode. The Controller will now display the pressure in the line.
9. The INFLATE LED will be illuminated.

(Continued on page 13)

Calibration/Test Methods (CONTINUED)

CALF CALIBRATION PROCEDURE *(Continued)*

10. Connect the calibrated air pressure source to the Calf Pressure Transducer using a piece of tubing.
11. With 18.0 ± 0.1 mmHg applied, press the Comfort Cooling Button. (This will record the 18 mmHg set point in System software.)
12. The ASSESS LED will be illuminated.
13. Disconnect the tubing. With no pressure applied, press the Comfort Cooling Button. (This will record the 0 mmHg set point in System software.)
14. Turn the Controller off.
15. Reconnect the BLUE tubing. Particular care should be taken to avoid stressing or kinking the tubing.
16. Carefully replace the front cabinet and turn the Controller on its face. Check for proper placement of feet, foam, and tubing.
17. Refasten the five screws. (Do not over-tighten.)
    CAUTION: *If the Comfort Cooling Button is pressed inadvertently during the Calibration other then when specified in steps 8, 11, and 13, the Controller must be recalibrated.*

GENERAL FUNCTION TEST

The following describes a General Function Test which can be used to exercise the Controller. This test is not part of the normal testing and maintenance routine, but can be used in the event of disassembly to verify:

- The correct wiring and connection of the solenoid valves.
- The correct orientation and connection of the pneumatic circuit.
- There is no blockage or leaking in the pneumatic circuit.

GENERAL FUNCTION TEST *(Continued)*

1. Press the Hidden and Comfort Cooling Buttons simultaneously while turning on the Controller. (The Hidden Button is located on the control panel at the very right end of the dark blue horizontal line.) This places the Controller in the Test Access Mode. The display will show "01."
2. Press the Hidden Button until "06" is on the display. ***NOTE:*** *Test Access Modes "01," "02," "05," "07," and "10" require dedicated manufacturing test equipment and are not intended for customer use. Do not use.*
3. During the procedure you will gently hold a finger near each air outlet port on the back of the Controller to verify air flow is present for each cycle at the correct port. The order of the ports from left to right, looking at the back of the Controller, is Ankle, Cooling, Calf, and Thigh (see Figure 4). The flow will gradually increase for the Ankle, Calf, and Thigh. The flow will start a maximum and stop abruptly for the Cooling.
4. To initiate the test, press the Comfort Cooling Button.
   - ◆ The ankle valve will open, the Controller will beep, and the compressor will run at minimum flow for five seconds. (Flow should be detected at the Ankle port as described earlier.)
   - ◆ The compressor will ramp up to maximum flow in two seconds.
   - ◆ The Controller will beep and remain at full speed for five seconds.
   - ◆ The calf valve will open, the Controller will beep, and the compressor will run at minimum flow for five seconds. (Flow should be detected at both the Ankle and Calf ports as described earlier.)
   - ◆ The compressor will ramp up to maximum flow in two seconds.
   - ◆ The ankle and calf ports will close and the thigh valve will open. The Controller will beep, and the compressor will run at minimum flow for five seconds. (Flow should be detected at the Thigh port as described earlier.)
   - ◆ The compressor will ramp up to maximum flow in two seconds.
   - ◆ The Controller will beep and remain at full speed for five seconds.

(Continued on page 14)

Calibration/Test Methods (CONTINUED)

GENERAL FUNCTION TEST *(Continued)*

◆ The thigh valve will close and the Cooling valve will open. The compressor will run at maximum flow for five seconds.

◆ The Compressor will beep, waiting for setup of the leak detection arrangement.

5. Connect a tubing set and pair of medium sleeves, each wrapped around a 4 in (10 cm) diameter PVC pipe. (Style 5330 or 6330 Sleeves should be used and wrapped such that two fingers can fit comfortably between the Sleeve and the pipe. Ensure that the Tubing Set and Sleeves are leak-free.)
6. Press the Comfort Cooling Button to initiate the leak test.

   ◆ The Controller will inflate the ankle and calf chambers of the Sleeves and then holds low pressure in the calf chamber for 40 seconds.

   ◆ The Controller will beep after twenty seconds and again after forty seconds.

   ◆ If a significant leak was detected, the display will read "LO." If no leak was detected, the Controller will beep and "06" will be displayed.
7. Turn off the Controller.
8. If a leak was detected, check the tubing connections inside and outside the unit and repeat the test. If a leak is still detected, return the Controller for servicing.

Disassembly/Reassembly

FRONT CABINET REMOVAL

CAUTION: *SHOCK HAZARD. Disconnect line cord from the power supply.*

CAUTION: *Disassembly of the unit and particularly the disconnection of pneumatic and/or electronic components can disrupt the function and calibration of the instrument. It is strongly recommended that the Calibration and General Valve Function Tests be performed upon reassembly.*

ESD WARNING: *Unit should only be opened by person trained in ESD methods and equipment.*

(Refer to Figures 5 and 6 located in the Appendix).

1. To remove the front cabinet, place the Controller on its face and remove the five screws located on the back of the unit.

2. With the Controller standing upright and facing you, carefully lower the front cabinet toward you.

3. Note the location and orientation of the connectors from the rear cabinet components on the CPU Board. Remove the connectors by gently pulling on each individual connector. Some connectors have locking clips that must be gently squeezed to disengage.

4. Very gently disconnect the RED and BLUE tubing at the pressure transducers on the CPU Board.

CIRCUIT BOARD REMOVAL

The CPU Board is located on the front cabinet. The Power Board is located on the rear cabinet directly above the compressor.

CAUTION: *Use a grounded strap when handling any electronic components.*

1. Note the location and orientation of all the pneumatic and electrical connections to the PC Boards (see Figure 7). (Label cables and tubing if necessary.)
2. Disconnect all the pneumatic and electronic leads to the PC Boards.
3. Remove the six mounting screws located on the CPU Board.
4. Carefully slide the Power Board out of the Controller from between the compressor and top of rear cabinet.

CAUTION: *Components on the PC Boards should not be removed or replaced. If a circuit board is suspected of being faulty, the unit should be returned for repair by calling the toll-free service number (800) 765-4324.*

CIRCUIT BOARD INSTALLATION

CAUTION: *Use a grounded strap when handling any electronic components.*

1. Carefully align the CPU Board with the mounting bosses and fasten the six mounting screws.
2. Carefully slide the Power Board into the Controller between the compressor and top of rear cabinet.

COMPRESSOR

The Rotary Vane Compressor is driven by a state-of-the-art brushless DC motor. Flow is controlled by adjusting the rotational speed of the motor. The higher the speed, the greater the flow. The motor control circuit which controls the motor speed is located on the Power Board and is not integral to the motor on the Compressor.

NOTE: The Compressor used in the instrument is not a user serviceable component. Special jigs and fixtures are required to ensure proper alignment during reassembly.

Do not disassemble.

Do not oil.

Disassembly/Reassembly (CONTINUED)

COMPRESSOR OUTLET FILTER

Removal of the front cabinet exposes the compressor filter. The filter is mounted below the compressor. The filter is designed for long life. In the event the filter becomes loaded, flow will become obstructed and the Controller will repeatedly trigger a d5, LO, or SL alarm. When this occurs replace the filter as follows:

Remove the inlet and outlet tubes from the filter. Take the filter off the Nylon hook pad, replace with a new filter, and then reattach the tubing. Make sure the tube exiting the compressor is connected to the inlet side of the filter. Direction of flow is from the compressor to filter to valves (see Figure 4), and is identified on the filter housing (avoid kinking any tubing).

VALVES

- All four valves are arranged in a 2-by-2 single manifold.
- The valve that connects the pump to the Sleeve Cooling (Vent) Port is a 2-way, normally closed type. When energized, it passes air to the port; when de-energized, flow is blocked.
- Three valves on the manifold connect air flow from the compressor to the Sleeve through the Ankle, Calf and Thigh ports. The Ankle and Thigh valves are 3-way, normally closed type. The Calf valve is a 2-way, normally open type and is in series with the Ankle valve. When energized in particular combinations, these valves pass air to their respective Sleeve ports. When de-energized, pump air is blocked and the air pressure in the Sleeves is released through the ports on the top of the Ankle and Thigh valves (the Calf chamber depressurizes through the Ankle valve). When the Controller is turned off for any reason, all the valves are de-energized, allowing the Sleeves to deflate.
- The coils on all four valves are removable by removing the nut at the top of the valve.
- Any debris in the air lines could cause mechanical malfunction of the valves. If this is suspected, the valve tubing should be disconnected and the valve flushed with filtered compressed air through the port while energizing the valves respectively from a 24-volt supply. Filtration of incoming air guards against debris entering the compressor. If debris is present, it may indicate:

  a. Failure to clean the filters when needed.

  b. Physical breakdown of some component of the pneumatic circuit, for example, degradation of a section of tubing.

UNIT REASSEMBLY(3)

1. Place the rear cabinet with the complete chassis installed, on the bench in front of you with the front of the Controller towards you.
2. Place the front cabinet with the bottom edge of the front cabinet against the rear base. The front cabinet should be toward you with the rear cabinet behind.
   - Reconnect all of the electrical connections in the proper location and orientation of the leads from the Controller components. Replace the connectors by gently pushing straight in.
   - Reconnect the tubing on the pressure transducers: the RED tubing should connect to the Ankle Pressure Transducer marked RED on the PCB, the BLUE tubing to the Calf Pressure Transducer marked BLUE on the PCB. Particular care should be taken to avoid stressing the fittings on the pressure transducers.
3. Place the front cabinet over the rear cabinet base. Carefully align the two halves, making sure the rubber feet are in place and aligned properly.
   - Turn the closed Controller on its face and reinstall the five screws.
   - Turn the Controller right side up and perform the General Function Test.

(3) NOTE: It is recommended, before case reassembly, that any disassembly which involves the electrical or pneumatic circuit requires a recalibration. (See Calibration Procedures.)

Specifications

MODEL #7325

UL Listing .....Built to UL2601-1 and CSA-C22.2 No. 601.1-M90 Standards UL Classified File #E192350

UL Device Classification .....Class 1, Portable, not AP or APG Equipments

Mode of Operation .....Continuous

Ingress of Water Protection .....Ordinary

Compression Type .....Sequential, Gradient Pressure

Compression Cycle .....11 Seconds Compression Decompression Time based upon Vascular Refill Detection measurement

Set Pressure .....45 mm Hg

Bed Hook .....Yes

Power Cord Storage .....Yes

Audible/Visual Alarms ....Low Pressure, High Pressure, Internal Electronics Malfunction

Sleeve Cooling Function .....Yes

Cycle Monitor .....Yes

Power Cord .....Hospital Grade Plug

Controller Height .....6 inches

Controller Width .....10 3/4 inches

Controller Depth .....4 1/2 inches

Weight .....9.3 lbs.

Power Requirements .....115 VAC, 86 VA, 60 Hz

Shipping Unit .....Each

Shipping Case Dimensions .....Length - 13 3/8 inches
Width - 11 inches
Depth - 10 3/8 inches

Shipping Weight .....12.6 lbs.

Tubing Set .....Included

Operating Instructions .....Attached to unit under handle

Operation & Service Manual .....Included

Transport & Storage .....0° to 50°C
If the user suspects that the environmental conditions for transport and storage have been exceeded, return the unit for service.

THIS DEVICE IS NOT SUITABLE FOR USE IN THE PRESENCE OF FLAMMABLE ANESTHETIC MIXTURES.

This symbol indicates that this equipment is Type B with respect to the protection against electric shock.

The UL Classification Mark for Canada and the United States.

Parts Listing

Sleeves and Tubing Assemblies can only be purchased directly from Kendall Customer Service at (800) 962-9888.

To order repair parts listed here, call Electronic Assembly Corporation at (800) 765-4324.

Description	Part Number
Fan Filter	KL8173
Fan Guard	KL8044-2
Compressor	KL8181
Compressor Muffler	KL8180
Compressor Filter	KL8292
Front Cabinet	KL8185-2
Rear Cabinet	KL8967-2
Fan (60mm 24V)	KDE24D6PHS3
Fuse (0.75 Amp 3 AG Slo Blo)	LF 313 750
Fuse Holder	LF 345 611
Membrane Switch	KL11351
Operating Instruction Decal	KL11354
Power Cord	KL8179
Rubber Feet (2 per bag)	KL8189
Strain Relief	Heyco 1220 or 1605
Power Switch	MRQ 1852-1125
Power Supply PC Board	KL8091
CPU PC Board	KL11346 or KL11449
Valve Assembly	KL11201 or KL11223
Transformer	KL11352 or KL11365
Acoustical Foam (set of 4 pieces)	KL8174-2
Nylon Hook Pad	001-000073
Hook	KL8188
Board-to-Board Cable	KL8182

Quality Specifications

MODEL #7325

The following information is a brief description of the tests performed on all SCD RESPONSE Compression System Controllers to ensure compliance to the prescribed System quality specifications and does not include clinical performance.

1.0 Electrical Tests

1.1 Power and Control Printed Wiring Board Assemblies

The boards are tested on a board test fixture for the following functions:

- 1.1.1 Individual component integrity
- 1.1.2 Component installation
- 1.1.3 Board calibration

1.2 Controller

- 1.2.1 Correct sequential activation of INFLATE and ASSESS LEDs
- 1.2.2 Comfort Cooling Button and LED function
- 1.2.3 Dielectric Voltage Withstand Test (Hi-Pot)
- 1.2.4 Power Switch function
- 1.2.5 Indicator lights and button functions

2.0 Pneumatic Functional Tests

- 2.1 Controller calibration at 45 ± 2mmHg
- 2.2 Airflow supporting compression in the ankle, calf, and thigh
- 2.3 System high pressure fault detection
- 2.4 System low pressure fault detection

3.0 Burn-In Requirements

While operating in the Burn-In Mode, the Controller is run for 48 hours to enhance unit reliability

4.0 Visual Attributes Inspection

- 4.1 Case parts appearance and alignment
- 4.2 Labeling

5.0 Final Product Inspection

Final release criteria utilizes 100% testing of Controllers for the following:

- 5.1 Calibration
- 5.2 Air flow levels
- 5.3 Cosmetic defects

Figure 3

Diagram of Power Cord Storage

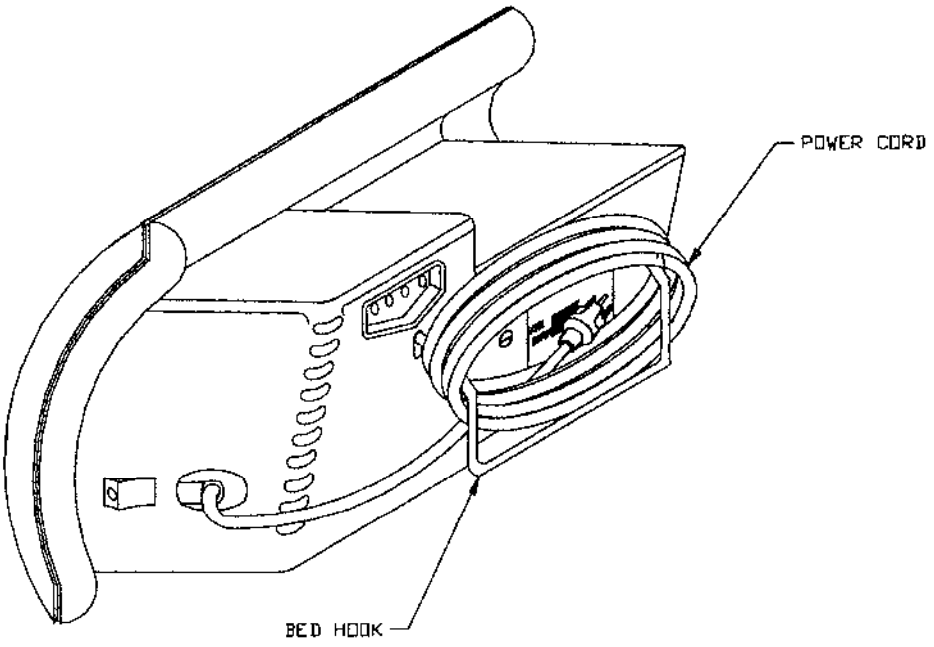

Figure 4

Pneumatics Schematic

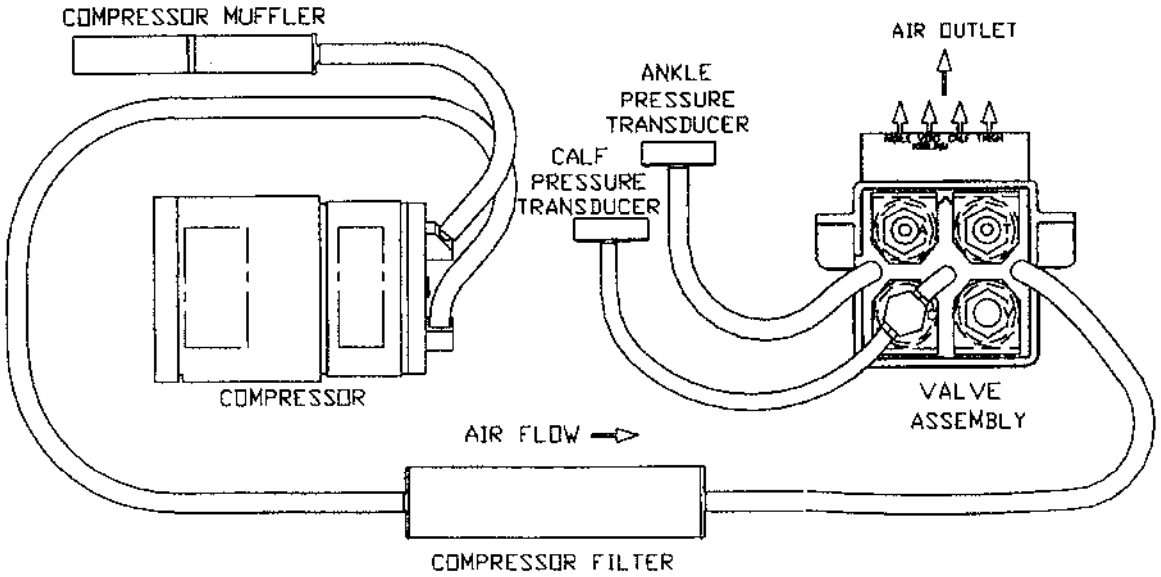

Figure 5

System — Exploded View

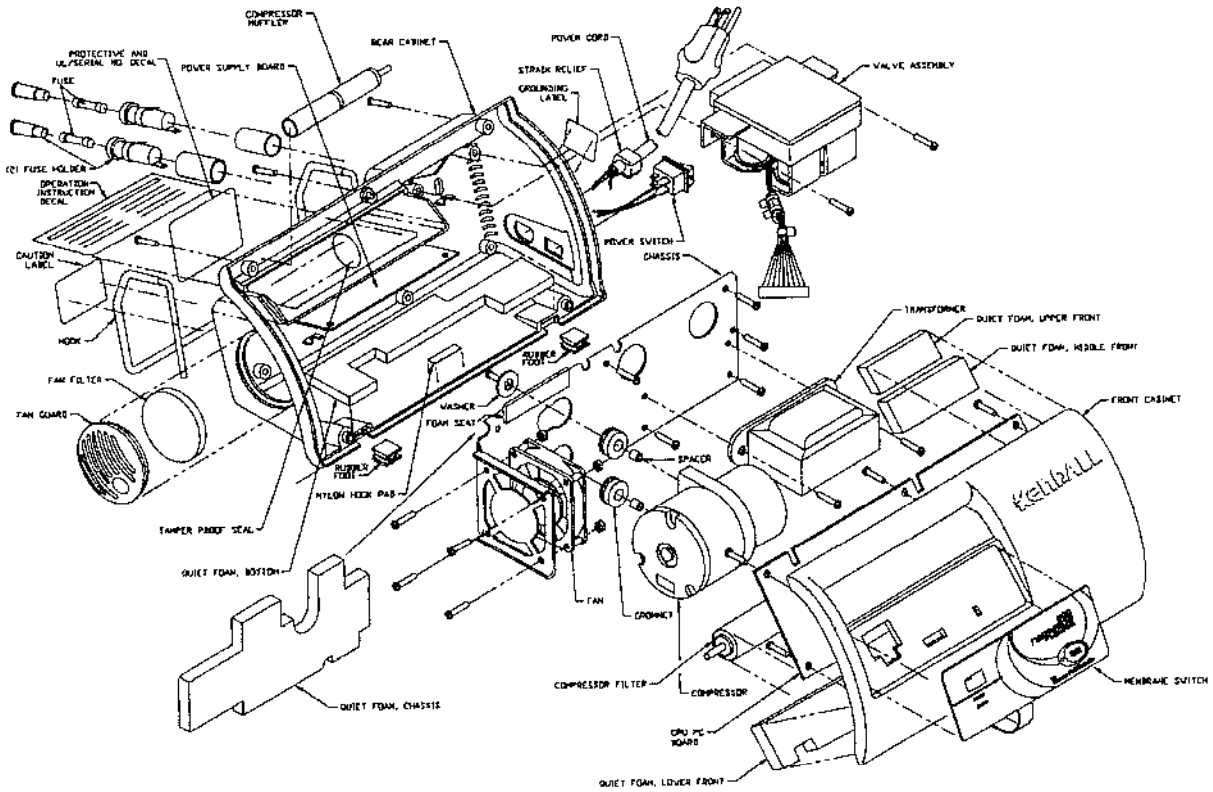

Figure 6

Pneumatics & Electrical Circuits

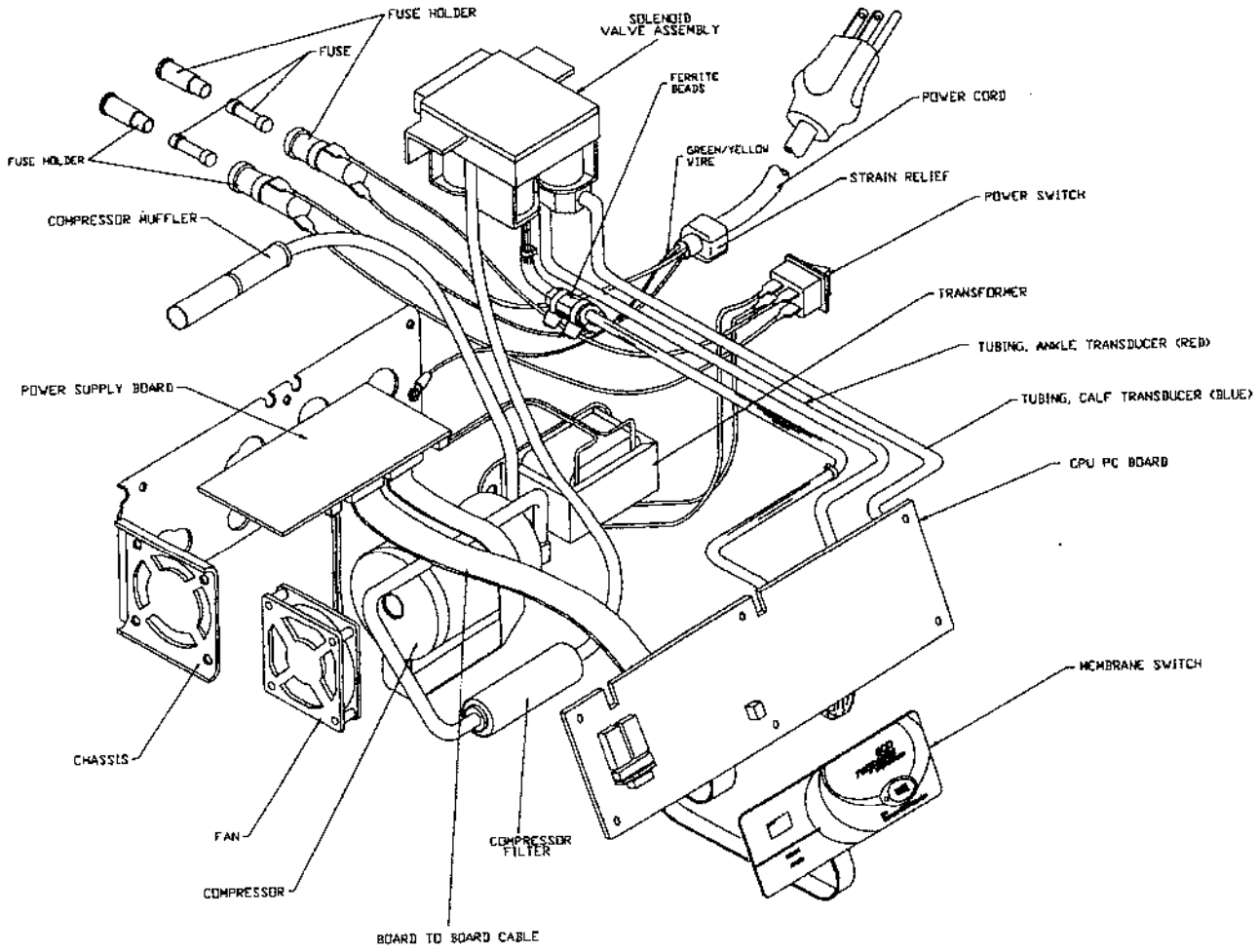

Figure 7

Electrical Schematic

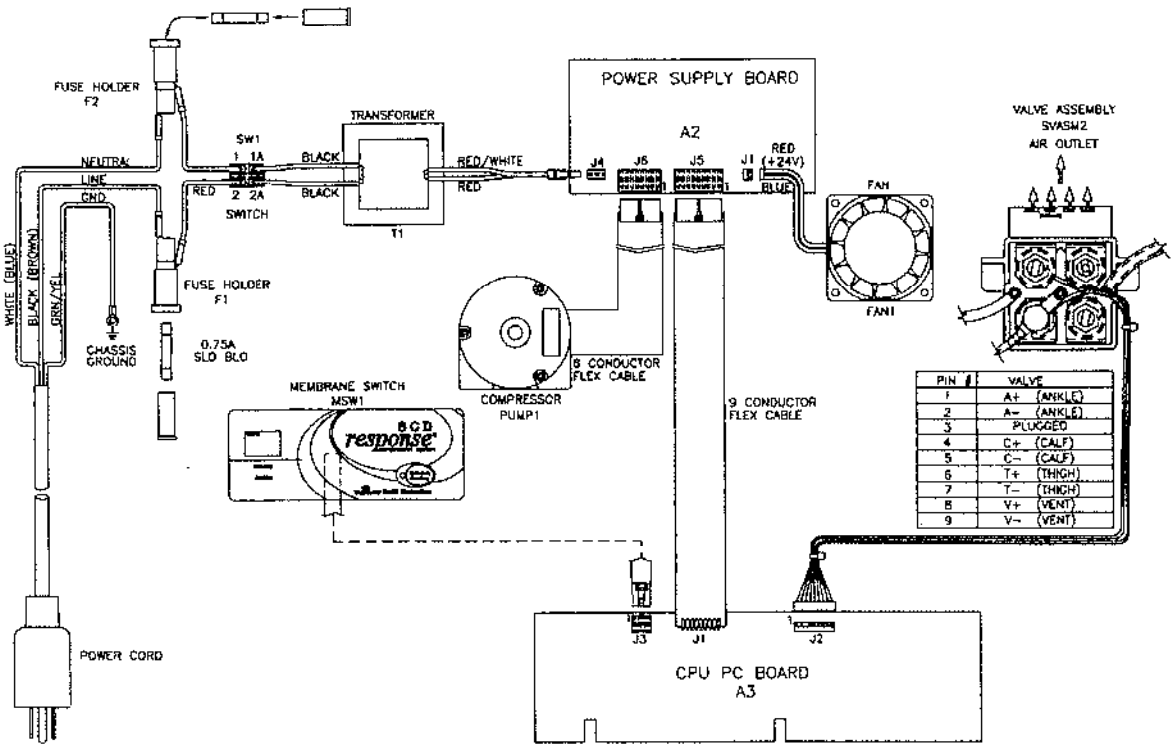

PIN #	VALVE
1	A+ (ANKLE)
2	A− (ANKLE)
3	PLUGGED
4	C+ (CALF)
5	C− (CALF)
6	T+ (THIGH)
7	T− (THIGH)
8	V+ (VENT)
9	V− (VENT)